Huygens Institute - Royal Netherlands Academy of Arts and Sciences (KNAW)

Citation:

Barendrecht, H.P, Urease and the radiation-theory of enzyme-action. IV., in:
KNAW, Proceedings, 22 I, 1919-1920, Amsterdam, 1919, pp. 126-139

This PDF was made on 24 September 2010, from the 'Digital Library' of the Dutch History of Science Web Center (www.dwc.knaw.nl) > 'Digital Library > Proceedings of the Royal Netherlands Academy of Arts and Sciences (KNAW), http://www.digitallibrary.nl'

Chemistry. — *"Urease and the radiation-theory of enzyme-action".* By Dr. H. P. BARENDRECHT.

(Communicated in the meeting of May 31, 1919).

IV.

11. *Direct synthesis of urea by urease out of ammonium carbonate.*

According to the above theory the final equilibrium in the action of urease on urea will not always be found at complete hydrolysis.

In the case of a low concentration of urease the synthetic action in the outer shell will have free play.

In an alkaline urease solution, whatever its concentration, the enzyme will partially decay in the course of time, as was shown in part 9. In this case also a reverse action will manifest itself, proportional now to the concentration of urease.

To test this inference from the hypothesis, the following experiments were carried out:

In each of six large cylinders of about 1 Litre capacity 100 c.c. of water were introduced, into which 5.786 g. of ammonium carbonate were dissolved. Each of these cylinders was closed by a rubber stopper with two borings, the one carrying a straight glass tube, provided at the bottom with a bulb with pinholes, the other a bent glass tube, allowing the air-current, which was to be blown through, to pass into a second, smaller cylinder, in which the ammonia was to be absorbed. To this purpose each of these smaller cylinders contained 186,85 g. of H_2SO_4 $\frac{4}{10}$ N (which is equal to 185 c.c. $\frac{4}{10}$ N). The greater accuracy, obtained by weighing the absorbing acid, was necessary, considering that the effect looked for, was the difference of two large values and would presumably be only small.

In two of the large cylinders 3, in two others 6 g. of Soja-meal were introduced. The glass tubes of these cylinders were all closed with pieces of rubber tubing and clips. After a few hours those, making communication with the absorbing cylinders, were opened for a moment, to allow the carbonic acid, evolved by the partial change of the dissolved ammonium carbonate to ammonium carbamate, to escape through the sulphuric acid.

After leaving the six pairs of cylinders for 24 hours at room temperature, shaking through the Soja-meal from time to time, the connections with the absorbing cylinders were opened and 250 c.c. of saturated potassium carbonate was run into each of the larger cylinders through the long tubes. By then passing through for 24 hours vigorous currents of air, washed through sulphuric acid, all the ammonia was blown over into the sulphuric acid.

A few drops of octyl-alcohol, run in at the same time with the Soja-meal, prevented foaming.

The quantities of ammonium carbonate and sulphuric acid were chosen such, that only a few c.c. of NaOH $\frac{1}{10}$ N were required to titrate the free sulphuric acid, which was left.

The results of a preliminary experiment on March 14th, 1916 were as follows:

TABLE 22.

c.c. NH_3 $\frac{1}{10}$ N in

			Mean	NH_3 converted into urea
Amm. carb. alone	735.8	735.9	735.85	
Amm. carb. + 3 g. of Soja	735.15	734.85	735.—	0.85
Amm. carb. + 6 g of Soja	734.85	734.75	734.8	1 05

Afterwards, however, it became evident, that an appreciable quantity of NH_3 was developed from the Soja-meal [1]).

In order to estimate this, in each of two large cylinders 250 c.c. of saturated potassium carbonate, 100 c.c. of water and 4 drops of octyl-alcohol were introduced. Moreover in the one 6, in the other 12 g. of Soja-meal. Each was connected with one of the small cylinders, into which 5 c.c. H_2SO_4 $\frac{2}{5}$ N and some water had been brought. After some 5 hours of blowing through the whole was left at room temperature till the next day and the blowing was started again and continued till the following day.

The 6 g. of Soja-meal had given 1,1 c.c. of NH_3 $\frac{1}{10}$ N.

The 12 g. of Soja-meal 1,65 c.c. of NH_3 $\frac{1}{10}$ N.

Hence in the mean for 6 g. of Soja-meal 0,97 c.c. $\frac{1}{10}$ N.

---

1) Special experiments established that no NH_3 was formed out of urea by the prolonged action of saturated potassium carbonate.

Correcting the figures of March 14th by this value we get:

ammonia converted into urea by

3 g. of Soja 1,33 c.c. $\frac{1}{10}$ N

6 g. of Soja 2.02 c.c. $\frac{1}{10}$ N.

March 28th 1916. In the large cylinders 11.572 g. of ammoniu carbonate and 100 c.c. of water. In the small cylinders 190 g. H_2SO_4 of about 0,8 N (1 gram = 7,85 c.c. $\frac{1}{10}$ N).

In two of the six large cylinders 6 g. of Soja-meal, in two othe 12 grams.

After 24 hours' standing at room temperature 250 c.c. of saturat potassium carbonate and a few drops of octyl-alcohol were introduc into each and the ammonia blown over for 48 hours.

Results:

TABLE 23

c.c. NH_3 $\frac{1}{10}$ N in:

	First cylinder	Second cylinder	Mean	Corrected for NH_3 out of Soja	NH_3 converte into urea
Amm. carb. alone	1462.4	1462.5	1462.45		
Amm. carb. + 6 g. of Soja	1460.7	1460.5	1460.6	1459.6	2.85
Amm. carb. + 12 g. of Soja	1458.5	1458.4	1458.45	1456.5	5.95

May 16th 1916. A solution of about 95 g. of ammonium carbona in 1 Litre of water was prepared and saturated with carbonic aci

Two large cylinders, each with 100 c.c. of this solution and 250 c. of saturated potassium carbonate were connected with small cylinde containing each 174 g. H_2SO_4 0,8 N and all the ammonia blow over into the acid by passing an air current for 48 hours.

Four large cylinders (*A*) received each 100 c.c. of the same amm nium carbonate solution and 6 g. of Soja-meal.

Four others (*B*) each 100 c.c. of ammonium carbonate solutio and 12 g. of Soja-meal.

After 2 days at room temperature one cylinder *A* and one cylinde *B* were analysed by introducing 250 c.c. of saturated potassiu carbonate and blowing over the ammonia into 174 g. acid for tw days. In the same way one *A* and one *B* were treated after 3 day and two cylinders *A* and two cylinders *B* after 4 days. See Table 24

Evidently the equilibrium is scarcely reached in about 3 days. I the activity had remained unchanged, it might have been reache much sooner, or probably no synthesis at all had been effected According to what we have seen above, the urease had been graduall

Results :

TABLE 24.

c.c. NH_3 $\frac{1}{10}$ N in:

	First cylinder	Second cylinder	Mean	Corrected for NH_3 out of Soja	NH_3 converted into urea
Amm. carb. alone	1352.1	1352.7	1352.4		
Amm. carb. + 6 g. of Soja, 2 days	1351				
Amm. carb. + 6 g. of Soja, 3 days	1350.9				
Amm. carb. + 6 g. of Soja, 4 days	1350	1350.5	1350.3	1349.3	3.1
Amm. carb. + 12 g. of Soja, 2 days	1349.9				
Amm. carb. + 12 g. of Soja, 3 days	1348				
Amm. carb. + 12 g. of Soja, 4 days	1348.7	1348.6	1348.7	1346.7	5.7

weakened by being dissolved for such a long time in an alkaline medium and therefore a gradual displacement of the equilibrium to the side of urea was to be expected.

These experiments show clearly, that a small part of the ammonium carbonate disappears through the action of urease and that this part is proportional to the amount of urease present. Both facts are in accordance with the above theory of the synthesis of urea.

12. *The determination of H- and OH-ion concentration.*

Since the theory and results, communicated in this paper, will both have emphasized the dominating importance of frequent and therefore simple p_H determinations in enzyme research, it may be useful to give the following details of the apparatus used for this purpose.

It was nearly the same as that, described by the author as "A simple Hydrogen Electrode" in Biochem. J. 1915, 66.

The accuracy was improved by the addition of a little cup with saturated KCl solution, in which both the hydrogen-electrode and the tube of the calomel-electrode dipped. The latter was changed, as shown in Fig. 16 in order to avoid all capillaries and rubber connections. After a measurement the small flask, containing the calomel-electrode proper, was turned round and the dipping tube enclosed in a small tube with saturated KCl solution, as will be seen in the figure.

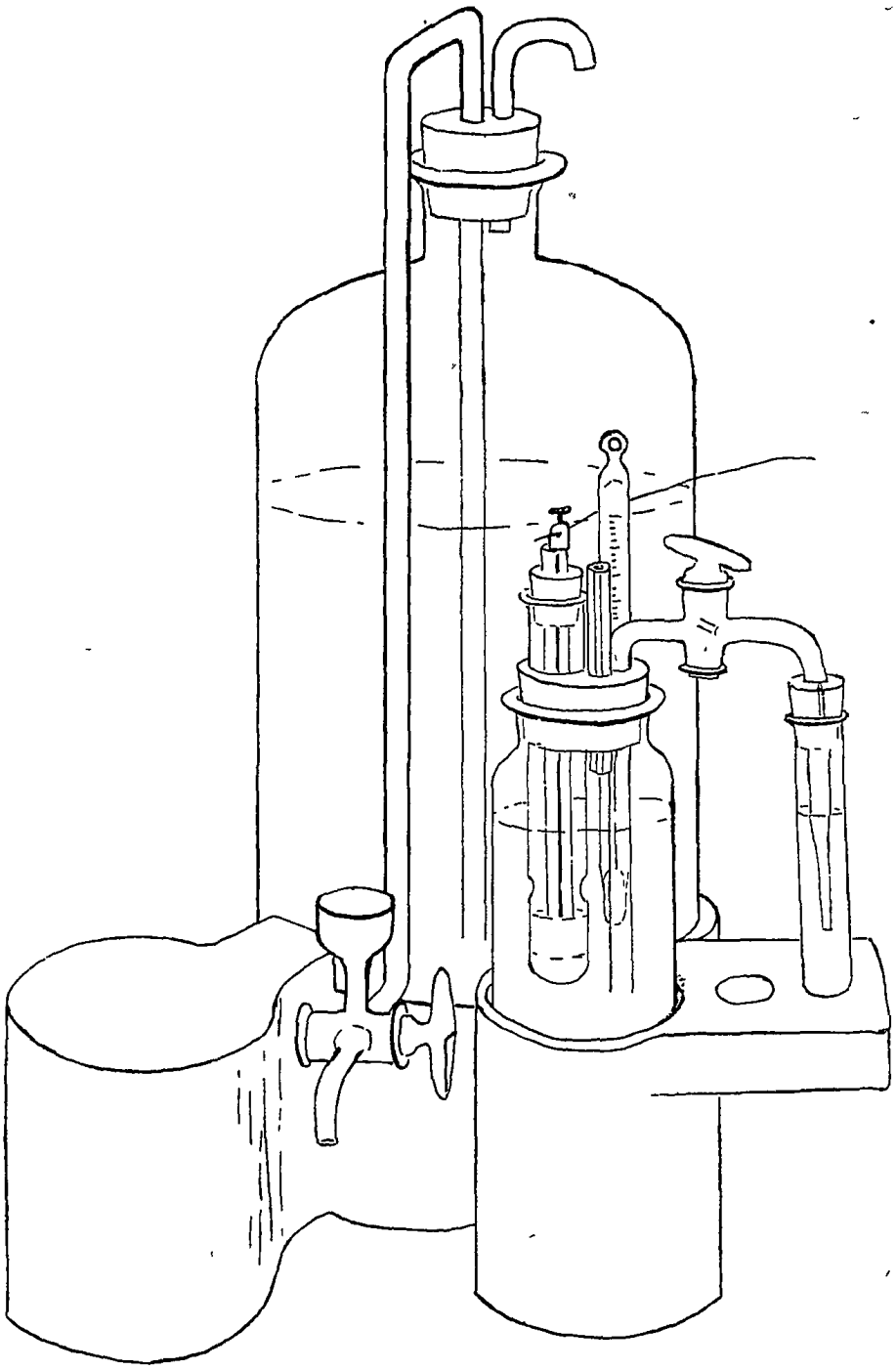

Fig. 16.

A stopcock, with a rectangular channel, allowed the small cup of about 2 c.c. capacity to be readily emptied from the large bottle with saturated KCl solution.

For the daily estimation of p_H the apparatus, represented in Fig. 17 has proved to be very satisfactory in the long run. The short perforated plunger, accurately filling up the inside of the cylinder,

when brought home, is rigidly connected to an overlapping cap, screwed on the outside of the cylinder. By turning the handle *A* backwards with cock *K* closed, cap and plunger are turned too and the latter is therefore drawn a little out of the cylinder. The liquid may thus be drawn up into the electrode tube, and by swinging the

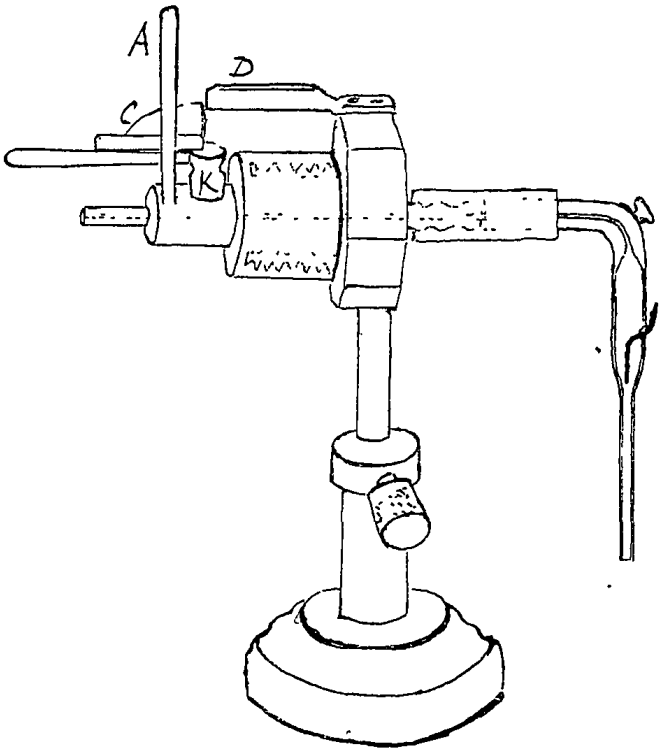

Fig. 17.

handle *A* gently to and fro the equilibrium between platinum-electrode, liquid and hydrogen can be easily established. Dead space and mistakes are avoided by the arrangements *C* and *D* on cock and frame. The protruding piece *D* allows the turning out of the plunger only, if the cock is shut and the quadrant *C* on the top of the cock is then in the position, shown in the figure. The same arrangement clearly helps to avoid the mistake of opening the cock and thus admitting the hydrogen, when the plunger is not turned home.

After shutting the cock, establishing equilibrium as described above, and adjusting the liquid in the electrode tube (by slightly turning the handle *A*) in such a way, that it just touches the point of the platinum wire, the whole apparatus is lifted up and placed on the wooden block of Fig. 16, the electrode tube dipping in the KCl-cup.

Another improvement was the carrying out of all these operations in an air-thermostat (Fig. 18), in which all the apparatus, shown

9*

in Figures 16 and 17 as well as the hydrogen generator and wash-bottles were kept on 27°. Constancy of temperature within $\frac{1}{4}$ of a

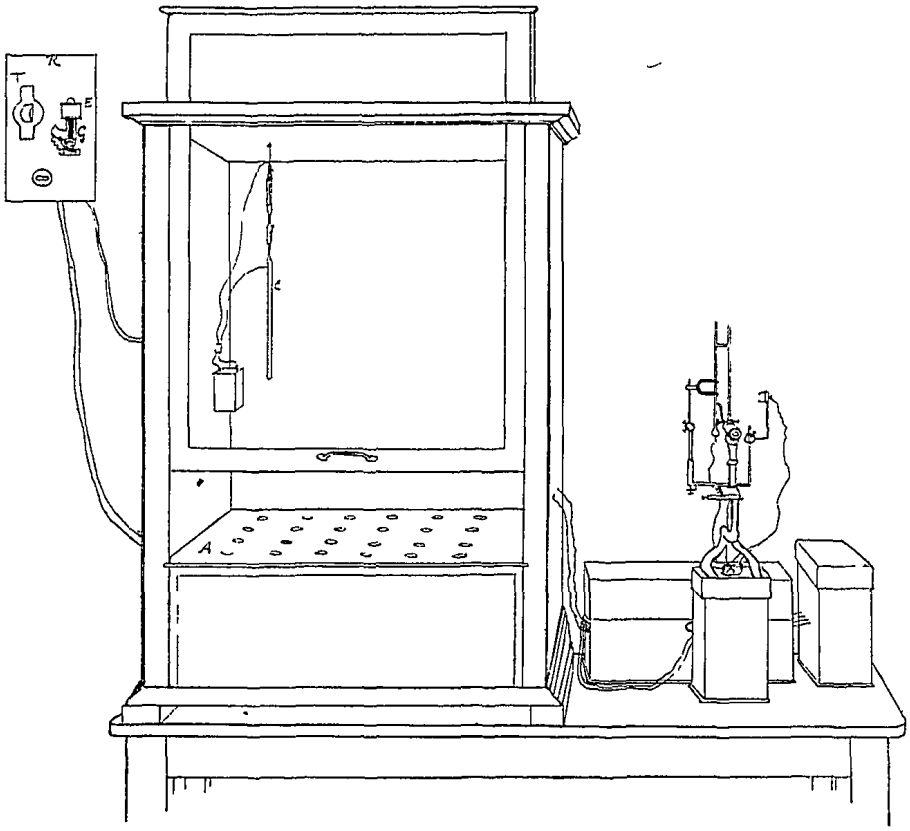

Fig. 18.

degree throughout the whole thermostat, which is amply sufficient, was attained by electrical heating in the following way.

Under the perforated bottom *A*, like the side walls and cover of the thermostat made of "eternite", a kind of concrete, some 130 metres of constantan wire of 0.4 m.m. diameter are spread out on a light frame. The current from the main of 220 Volts can be admitted to this wire by the relay *R*, an electrotechnical arrangement obtainable everywhere. A shunt of the current is reduced to some 8 Volts in the transformer *T*. This reduced current runs through the electromagnet *E* and is broken or opened by the regulator *C*. The latter is of the type, described by CLARK [1]), a spiral of nickel securing contact always at the same point of the mercury meniscus in a 2 m.m. wide capillary in pure hydrogen. To reduce sparking the poles of this regulator are also connected with a small condensor.

[1]) J. Amer. Chem. Soc. 1913, 35, 1889.

If the current is off, the iron plunger in the evacuated glass vessel G is down and keeps the mercury in the horizontal side-tube, allowing the main current to pass between the sealed in platinum contacts. A rise of a fraction of a degree causes the large volume of mercury in the regulator C to make contact with the nickel spiral, starting the 8 volts current and thereby lifting the plunger out of the mercury in G. The running back of this mercury interrupts the main current and stops its heating effect very quickly, the heating wires being rapidly cooled, owing to their position in the open space between the table and the perforated bottom of the thermostat. Another advantage of this arrangement is the automatic stirring of the air in the thermostat by the jets of hot air rising through the holes in the bottom.

The back and front walls are double glass windows; the latter can be lifted up, allowing the necessary operations to be performed in the thermostat. These take only a few minutes. The temperature in the inside is so quickly restored after shutting the window, that the apparatus are practically maintained at the required temperature.

As will be seen in Fig. 18, the potentiometer is connected by thin wires, passing through the walls of the thermostat, with the electrode inside, with the capillary electrometer, mounted on a box, which contains an accumulator for its small lamp, and on the other side with the working accumulator and the Weston cell, contained in the third box.

As mentioned in part 5 of this paper, a direct estimation of the concentration of hydroxyl-ions, or of p_{OH}, in 8 °/₀ phosphate solutions had become indispensable.

The principle, on which these determinations were based, was the following:

By saturating a blacked platinum electrode with oxygen, an OH electrode may be obtained in the same way as a H electrode is made with hydrogen.

If π_c be the potential of the calomel electrode with saturated KCl solution and π_{OH} that of the OH electrode, the electromotive force, measured in the usual way at 27° is

$$E = \pi_c + \pi_{OH} = \pi_c + 0{,}0595 \log \frac{C}{c},$$

where C represents the concentration of OH, corresponding to the electrolytic solution pressure of the OH electrode, and c the OHion concentration. In such a cell the oxygen electrode is positive, the calomel electrode negative.

A second solution with a different hydroxyl-ion concentration gives in the same way:

$$E' = \pi_c + \pi'_{OH} = \pi_c + 0{,}0595 \log \frac{C}{c'}$$

Therefore:

$$E' - E = \pi'_{OH} - \pi_{OH} = 0{,}0595 \log \frac{c}{c'}$$

from which, substituting $p_{OH} = -\log c$ and $p'_{OH} = -\log c'$:

$$E' - E = 0{,}0595 (p'_{OH} - p_{OH}).$$

Thus, by measuring the electromotive force of the calomel electrode, combined, first with a solution of known p_{OH}, e.g. a SÖRENSEN's phosphate solution, and then with an 8 % phosphate solution, this equation for $E'-E$ gives at once the value p'_{OH}.

Determinations of this kind with two SÖRENSEN's solutions gave nearly the right value.

As is well known however, an OH electrode does not give at all as constant and accurate results as a H electrode. The potential of an OH electrode has always been found about 150 millivolts too low, which fact is commonly ascribed to the formation of some suboxyde of platinum.

This constant depression is, however, eliminated in our formula. Moreover it proved possible to arrange the experiments in such a way, that the influence of the inconstancy was repressed considerably.

Some 10 c.c. of the liquid to be examined were introduced into a small tube of about 1 cm. diameter. By dipping the electrode tube into this small quantity a quick and thorough saturation with oxygen could be obtained.

The oxygen, free from hydrogen, was washed in a bottle with 3 % KI solution to keep back possible traces of ozone. It was brought to the temperature of 27° by keeping the washbottle and rubber tubing as well as the other apparatus (the same as used for the p_H determination) in the thermostat.

After oxygen has been through for some 10 minutes, the electrode tube was lifted out of the liquid under examination and connected with the calomel electrode as usual by means of the KCl-cup; the electromotive force was read within about one minute.

This process was carried through alternately with a SÖRENSEN's solution (usually 5,6 c.c. alkaline + 4,4 c.c. acid phosphate), then with the 8 % phosphate, and then with another SÖRENSEN's solution (9 c.c. alkaline + 1 c.c. acid phosphate). Immediately after this the same series of three observations was once or twice repeated. Every estimation of the unknown p_{OH} was thus preceded and followed at

the same interval by determination in a liquid of known p^{OH}. As a gradual change in the electromotive force of the same combination was generally noticed on returning to it after the two other estimations, the influence of this change could at any rate be eliminated for the greater part by interpolation.

The value, determined in this way for the negative logarithm of k_w in 8 °/₀ phosphate solutions, was in the mean

13,78.

As to the long standing problem, why the potential of the OH electrode is usually found about 0,15 Volt too low, some information may be derived from the following observation.

If the blackened platinum electrode had been polarised kathodically in dilute sulphuric acid, the value found for its potential was too low, in accordance with the experience of previous investigators. If, however, the electrode had been the anode in sulphuric acid, the determination of its potential showed a value, by nearly the same amount too high.

The following estimations were carried out with the same 8 °/₀ phosphate solution ($p_H = 6{,}92$).

Oxygen electrode kathodically polarised:

$$\vec{\pi}_{H} + \vec{\pi}_{calomel} = 0{,}653 \ Volt$$

$$\overleftarrow{\pi}_{OH} + \vec{\pi}_{calomel} = -0{,}421 \ Volt$$

$$\pi_{H} + \pi_{OH} = 1{,}08 \ Volt$$

Oxyden electrode anodically polarised:

$$\vec{\pi}_{H} + \vec{\pi}_{calomel} = 0{,}653 \ Volt$$

$$\overleftarrow{\pi}_{OH} + \vec{\pi}_{calomel} = -0{,}736 \ Volt$$

$$\pi_{H} + \pi_{OH} = 1{,}39 \ Volt$$

The theoretical value for the electromotive force of the oxygen-hydrogen-cell at room temperature is 1,23 Volt.

This fact appears to indicate, that the difference between the potential, observed at the oxygen electrode and the theoretical value is due to a polarisation phenomenon, as it can be quantitatively reversed by reversing the state of polarisation of the electrode.

13. *General remarks.*

It will be clear from the contents of this paper, that the theoretical formula

$$\frac{nc}{0{,}434} \log \frac{1}{1-y} + ay = mt$$

is borne out by experiment in different ways.

The hydrogen-ions having been found to absorb the enzyme radiation, the question was considered, if the hydroxyl-ions possess this property also. If such were the case, the equation should be

$$\frac{\overset{++}{n}\,c + \overset{--}{n}\,c}{0{,}434} \log \frac{1}{1-y} + ay = mt.$$

By repeating the experiments of Part 3, but now with solutions of different p_H, in most cases $p_H = 7{,}21$, it was tried several times to decide this point. Combination of the factor $\frac{\overset{++}{n}\,c + \overset{--}{n}\,c}{0{,}434}$, found for two different p_H, should give the necessary equations to calculate both $\overset{+}{n}$ and $\overset{-}{n}$. As will be clear, however, from the considerations in Part 3, the inevitable small experimental errors have an even larger influence at a p_H below or above the $p_H = 7{,}52$ of maximum activity. It proved to be impossible to carry out experiments of sufficient accuracy for this purpose. Still, the values, obtained for $\overset{-}{n}$, though varying widely, were generally so small, sometimes even negative, that they allowed the conclusion, that the hydroxyl-ions (i.e. negative electricity) do not absorb the urease radiation.

Since the writer's first study on Enzyme-action [1]) in 1904, in which the probability was first pointed out, that also the catalytic action of hydrogen-ions and of many other catalysts might be due to radiation, the conception of catalysis as a radiation phenomenon has been taken up from different sides.

In a series of papers LEWIS [2]) has worked out the theory, that hydrogen-ions act catalytically through radiations, a molecule of the catalysed compound becoming only reactive, if its energy has been increased by absorbed radiation (ultra red heat. radiation) to the "critical" condition.

In extensive experimental researches NILRATAN DHAR [3]) pointed

---

[1]) Proc. K. Akad. Wetensch. Amsterdam and Zeitsch. physikal Chem. 49,4.

[2]) T. Chem. Soc. 1914, 2330, etc.

[3]) Proc. K. Akad. Wetensch. Amsterdam 1916 and T. Chem. Soc. 1917, 690.

out the analogy between chemical catalysts and light. His conclusion was, that: "probably the effects of increase of temperature, of light, and of chemical catalysts in a reaction are intimately connected and are possibly identical in nature". They all appeared to act by shifting the equilibrium between "active" and "inactive" molecules.

SUMMARY.

1. The enzyme urease acts by a radiation, which is only absorbed by its substrate, urea, and by H-ions.

2. The mathematical formulation of this conception is

$$-dx = m \frac{x}{x + nc} dt,$$

in which x is the concentration of urea at the time t, c the concentration and n the absorption-coëfficient of the H-ions, m a constant, proportional to the concentration of urease, if H-ion concentration as well as temperature are kept constant.

Integration gives the formula

$$\frac{nc}{0{,}434} \log \frac{1}{1-y} + ay = mt,$$

in which a is the initial concentration of urea, and y the fraction of a, still present at the time t.

3. By numerous experiments this equation is shown to represent the kinetics of urease action at constant p_H and temperature. It explains the nearly straight lines of the hydrolysis in alkaline solutions equally well as the practically logarithmic curves in acid ones.

4. Comparing equal concentrations of urease at varying H-ion concentration, the constant m is found to be dependent on the p_H; i. e. the activity of a given concentration of urease is a function of the p_H of the solution.

Plotting m as a function of p_H, the resulting curve is strikingly similar to the characteristic curves for the undissociated fraction of an amphoteric electrolyte as a function of p_H.

This connection can be formulated mathematically and leads to the conclusion, that urease is an amphoteric electrolyte, whose activity is greatest when undissociated. The curve obtained represents the excess of activity of undissociated over dissociated urease.

5. This mathematical formulation leads to an approximate determination of the dissociation-constants of urease, which are calculated to be not far from those of carbonic acid and ammonia.

6. The accelerating action on urease, ascribed by previous authors

to carbonic acid, is shown to be non existent. Ammonium carbonate + carbonic acid form a powerful buffer-mixture, which can maintain constancy of p_H, the indispensable condition for constant enzyme activity in a urea solution during hydrolysis by urease.

Fresh confirmation of the above formula for the rate of hydrolysis is afforded by many experiments with this buffer-mixture

7. The estimation of initial velocities of hydrolysis, equal concentration of urease being allowed to act on different concentrations of urea at constant p_H and T, produces results, which appear unexplainable without the radiation-theory.

The lower the p_H, the more these initial velocities increase on increase of the concentration of the urea. With high p_H there is first an increase and then a decrease on raising the urea concentration.

These facts are shown to be in perfect accordance withthe radiation-theory.

8. The influence of neutral substances is investigated experimentally and theoretically. Both decrease and increase of enzyme action by the same substance are explained by the influence the neutral body has on the dissociation-constants of water or of urease or of both of them.

9. The hypothesis is put forward that urease radiation, weakened by spreading or in any other way, causes synthesis.

Experimental evidence of this is afforded by the fact, that at high p_H, where the urease is shown to be decaying, reversion of the hydrolysis is several times observed.

10. A second inference from this conception, that outside the sphere of hydrolytic action around a urease molecule there must be a region of radiation, weakened by spreading, and therefore of synthesis, explains the fact, established by a series of new experiments, that, diluting the urease concentration beyond a certain value, its specific activity is decreased. For evidently the synthetic action of undecaying urease can only be manifested, if the spheres of hydrolytic action do not intersect each other sufficiently.

11. A third inference, that in any urease solution, in which the enzyme is decaying through the combined action of alkalinity, temperature and time, a synthesis of urea from ammonium carbonate, proportional to the urease concentration, will be observed, is tested experimentally and confirmed.

12. Description of an apparatus for the simple determination H-ion concentration at constant temperature.

The determination of the hydroxyl-ion concentration, which is needed for the calculation of the dissociation-formula of urease, is

carried out with the same apparatus, after converting the hydrogen electrode into an oxygen electrode.

Laboratory of the Dutch Yeast and Spirit Manufactory.

Delft.

A complete account of this investigation, with all experimental results, will appear in the Recueil des Travaux Chimiques des Pays-Bas.