**Physics.** — "*On the measurement of low temperatures.* XXVII. *Vapour-pressures of hydrogen in the neighbourhood of the boiling point and between the boiling point and the critical temperature.*" By P. G. CATH and H. KAMERLINGH ONNES. (Communication No. 152*a* from the Physical Laboratory at Leiden).

(Communicated in the meeting of June 30, 1917.)

§ 1. *Introduction.* Having obtained in the hydrogen-vapour cryostat [1]) the means of keeping temperatures constant for a considerable time between the boiling point of hydrogen and the melting point of oxygen, we were able to carry out a long desired determination of the vapour-pressure of hydrogen above the boiling point. Our investigation on this subject was in connection with the determination of the critical point of hydrogen and extends as far as this point. Accordingly a few of our results falling in the immediate vicinity of the critical temperature have already been published in the paper on the latter subject. [2])

In order to obtain a connection with the measurements of KAMERLINGH ONNES and KEESOM of the vapour-pressure below the boiling point, a few determinations were made in the neighbourhood of this point by means of the cryostat with liquid hydrogen and the vapour-pressure apparatus which were also used by the authors mentioned.

As we shall see in § 5 the agreement at the boiling point of hydrogen is not so close as we thought we might expect, considering the degree of accuracy of the measurements in both cases; consequently a renewed investigation with a view to establishing the boiling point of hydrogen with the accuracy required remains much to be desired.

---

1) H. KAMERLINGH ONNES, Comm. No. 151*a*. These Proceedings XIX (2) p. 1049.

2) H. KAMERLINGH ONNES, C. A. CROMMELIN and P. G. CATH, Comm. No. 151*c* These Proc. XX (1) p. 178. The present communication we have included in the series "On the measurement of low temperatures", as it forms an immediate continuation of Comm. XXIII of that series. It is, however, also closely connected with the series "Isothermals of di-atomic substances etc.", of which the communication just quoted froms N°. XIX.

69*

§2. *The helium-thermometer.* For our measurements we made use of a new gas-thermometer. In its main points it resembles the type of instrument last used by KAMERLINGH ONNES and HOLST [1]). We have introduced the improvements which had proved appropriate in the case of the thermometer for measuring temperatures to be obtained with liquid helium, [2]) as well as others which were suggested by the experience gathered in various measurements in the laboratory. One of the latter consists in the tube of the manometer which is on the side of the thermometer-bulb (the adjustment-tube) and the one which is turned the other way no longer being connected by a rubber tube,[3]) but by a glass tube) which involves the adjustment of the mercury by tap $K\Theta_1$ and $K\Theta_5$ (fig. 3 and fig. 4) [4]) being obtained by means of a mercury vessel $D$ connected to the tube by a rubber tube, air-traps (near tap $K\Theta_{10}$ and tap $K\Theta_3$) being interposed [5]). The various points are shown [6]) in fig. 1 which gives a general aspect of the thermometric apparatus and which must now replace Pl. I of Comm. No. 95*e*, and in figg. 3 and 4 which give diagrammatic views of the arrangement of the apparatus for our

---

1) Comm. N⁰. 141*a*. These Proc. XVII (1) p. 501 This type was described for the first time in Comm. No. 27, Zitt. Versl. Akad. Amsterdam, May 1896 as type *b*. It was used by KAMERLINGH ONNES and BOUDIN Comm. No. 60. (these Proc. III. p. 299) and afterwards, with only small modifications, by KAMERLINGH ONNES and BRAAK (Comm. No. 95*e*; these Proc. IX. p. 367.) Particulars may be found in the Communications quoted. In putting together the drawings from Comm. 27, 60 and 95*e* it should be noted, that even before Comm. No. 60 instead of *m* fig. 1 Pl. II. Comm. No. 27 for the purpose of filling the thermometer a tap like $K\Theta_g$ in fig. 3 of the present communication had been fitted to the apparatus (comp. Comm. No. 60; these Proc. III p 299, the end of § 21).

2) Comm. No. 119. These Proc. XIII, (2) p. 1093 and Comm. 124*b*. These Proc. XIV (2) p. 678.

3) The pressure-difference between the inside and outside of the tube in the measurement of the temperatures which are obtained with liquid hydrogen amounts to about 1 atmosphere and at this pressure a rubber tube, even when intended for a high vacuum and of a good quality, transmits air. Moreover the mercury becomes soiled in the long run. a treatment of the tube with caustic soda does not guard against this altogether. And finally the elastic time-action may be troublesome when adjusting to a definite pressure.

4) An additional figure: fig. 4 has been introduced in the translation.

5) In this figure some accessories have been introduced in the translation. It remains to be noted that the glass tubes connecting the different apparatus are given diagrammatically and some joints therefore are not shown in the figure.

6) When the adjustment is accomplished, the tap $K\Theta_5$ is closed. Any further small changes in the adjustment are carried out as in Comm. No. 124*b* by means of the adjusting screw fitted for this purpose (comp. fig. 1 and $\sigma_b$ and $\sigma_c$ on Pl. I Comm. No. 119 and fig. 3 of Comm. No. 124*b*.)

investigation regarding the vapour-pressure of hydrogen above the boiling point; if the communications quoted above are consulted, fig. 1 and, as regards the thermometer, figg. 3 and 4 will not require much explanation. [1])

At pressures above and below one atmosphere the mercury surface can now be read in one and the same tube $l'a_1$ [2]). By tap $K\Theta_8$ a vacuum can be produced above $l'a_1$ which is kept up by means of DEWAR's method of charcoal cooled in liquid air with $K\Theta_8$ and $K\Theta_{95}$ open and $K\Theta_9$ closed. For pressure-readings above one atmosphere $K\Theta_8$ is connected with a barometer and a space of constant and practically atmospheric pressure in the same manner as with the previous thermometer. (See fig. 1).

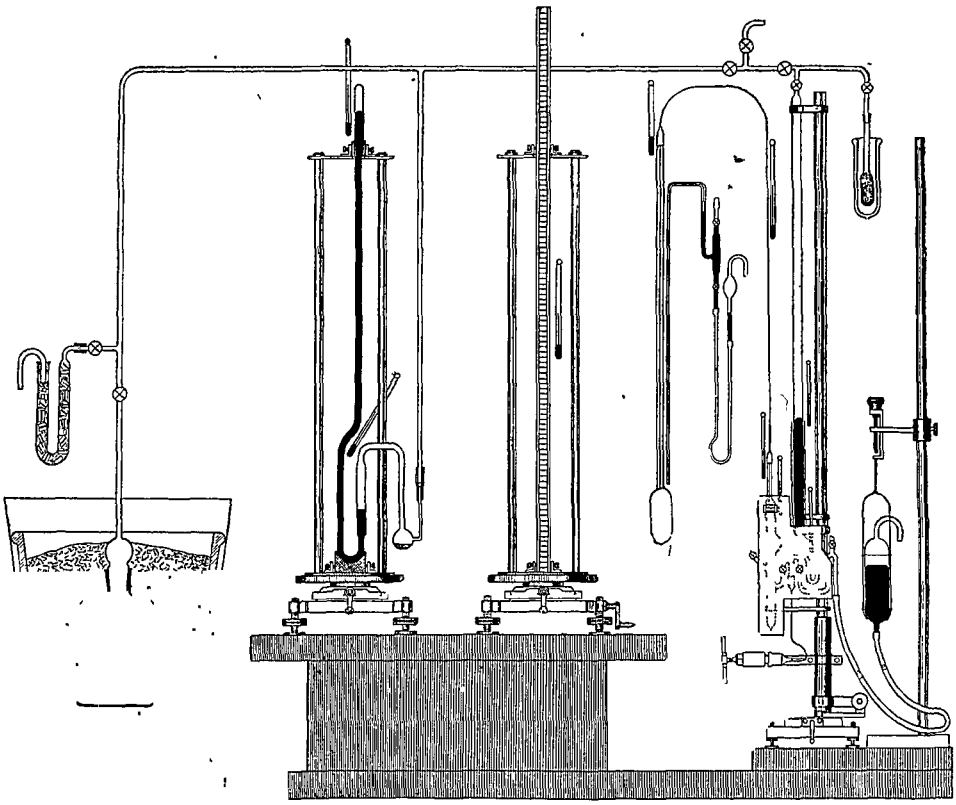

Fig. 1.

[1]) The letters in fig 3 are the same as those in the previous communications; modified parts are indicated by a dash or an additional dash.

[2]) At the time when the previous type of thermometer used in the latest experiments (Comm. 141 Proc. May 1914) was constructed, it was not possible to provide for a practically complete vacuum, with the same degree of certainty as at present.

In the connection of the adjustment-tube of the manometer [1]) with

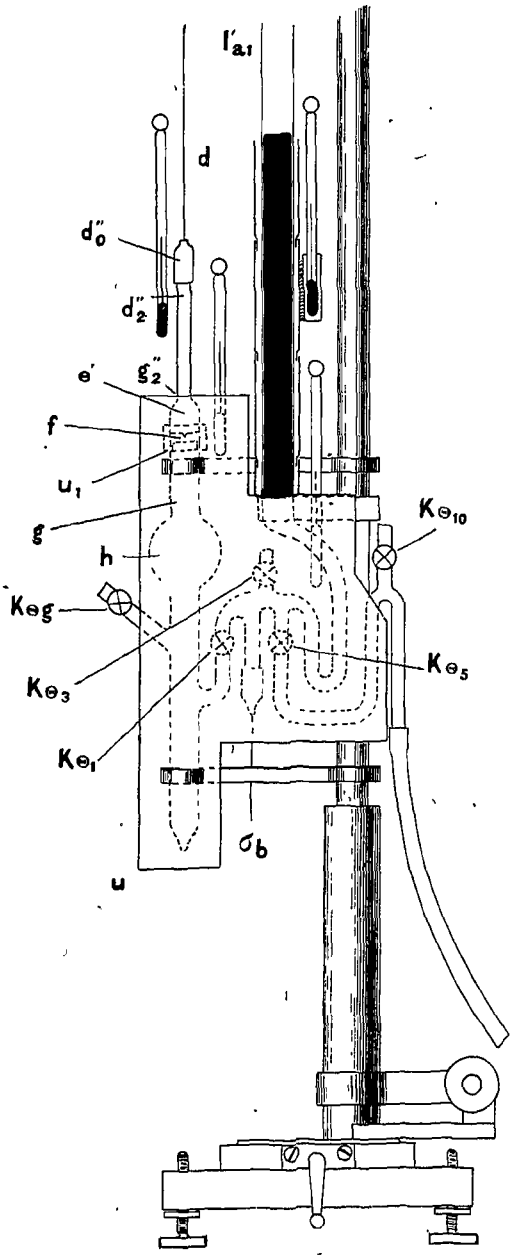


Fig. 4.

[1]) In the same way as previously the thermometer is provided with a wider part *h* below the adjustment-tube, in order that the thermometer may be filled at the ordinary pressure and that the zero-pressure may be raised to that of the international thermometer (1000 mms) by forcing up the mercury to close to the adjustment-point. A mark on the adjustment-tube makes it possible to obtain the desired filling at the ordinary temperature and pressure with sufficient accuracy.

the capillary of the thermometer the use of cement is now entirely avoided, in the same way as this was effected in the latest thermometer for helium-temperatures, (c.f. Comm. No. 124*b*). In the previous type of thermometer the cement between the steel cap and the glass had evidently been a constant cause of absorption of gas which showed itself in a change of the zero-pressure. [1])

With the thermometers constructed as they are at present we have not found any change of the zero-pressure which may not be deemed to fall within the limits of accuracy of the measurements (probable error of ·02 mm.).

At the top above the space where the adjustment is made the tube is finished off hemispherically ($g_2''$ figg. 3 and 4) and is blown to a capillary $d_2''$ which in its turn is soldered to a steel capillary connectingtube $Th_2''$ according to CAILLETET's method which is used in the construction of a great many apparatus in the laboratory. [2]) In order to reduce the "noxious space" as much as possible the small bored out steel adjustment-piece $e'$ of Comm. No. 124*b* is now ground into the hemispherical space $g_2''$. [3])

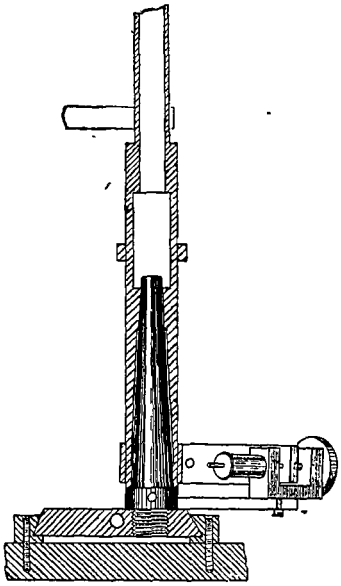

Fig. 2.

[1]) In the case dealt with in Comm. No. 95*e* this change amounted to ·61 mm. in 19 months and in another case ·18 in 4 months. CHAPPUIS found in his thermometer ·1 mm. in 3 months.

[2]) On the platinized extremity of the glass capillary a layer of copper is deposited electrolytically. Over this the copper cap is soldered into which the steel capillary has been previously soldered.

[3]) The small piece is raised into the adjusting-space from below. The tube

The adjustment-tube was manufactured from a tube which was as free as possible from optical errors: it did not give a difference in the reading, when a kathetometer was pointed on the adjustment-point *f* and the tube was interposed or removed. The steel piece is taken long enough to be sure that the tube on the level where the adjustment is made is not injured by the heating, when the capillary is sealed on.

To ensure uniformity of temperature of the mercury in the *U*-tube of the manometer — another condition for extreme accuracy — the glass-part of the thermometer which contains mercury is now so constructed [1]) that it may be conveniently surrounded by a closed [2])

---

which is attached to the thermometer for this purpose is sealed in a manner which may be seen in figg. 1, and 3 and 4 after the piece has been brought into its proper position. In the thermometer for helium-temperatures the operation could be performed by means of a ground joint (see fig. 3 Comm. No. 124*b*).

The piece is attached to the glass in its proper position by means of a very small quantity of sealing wax which has been previously freed of all vapours by exhaustion with liquid air. The bottom face of the piece is ground flat at right angles to the tube. It carries a point ·75 of a mm. long.

[1]) For the thermometer of helium-temperatures where very small differences of pressure had to be measured a pasted down cardboard chamber, fitted on the inside with copper screens, had been improvised for the same purpose. With the present arrangement the difference in the readings of two thermometers placed at different points in the chamber was less than 05 of a degree. The change during a day was below ·1 of a degree.

[2]) A characteristic of this type of thermometer is that the whole can be easily moved to a different position. This requirement has lost the special importance which it had at the time, when the first type was developed and it was still so much more difficult to obtain absolutely constant low temperatures

At the same time it has still its great advantange and it was possible to retain it in the new type. A movement up and down of the adjustment-space has become unnecessary by the special arrangement for pressures below one atmosphere.

The stand shown in previous drawings has been replaced by a more satisfactory one. Its base is now connected permanently with the levelling table on which it is mounted. The rod has been detached from the base and rests on it in the manner of the cone of the axle of a theodolithe resting in its conical seat (see fig. 2). This arrangement is especially convenient, when several thermometers are in use which it is desired to put by ready for use. Each thermometer then has its own rod, to which it remains attached while being kept; when it is to be used the rod is placed on to the common foot-stand.

In order that the kathetometer needs only be turned to focus both tubes of the manometer with equal sharpness, the manometer — like the barometer and standard-metre — is mounted on a slide which can be moved in the direction of the kathetometer-axis and the rod to which both arms of the manometer are attached can turn about the cone which is attached to the slide. (For the finer adjustment in this respect consult details in fig. 2).

copper chamber *U*, after the thermometer having been attached to its support. (See fig. 1 and 4). On the level of the adjustment-space it is provided with a slit for illumination and one for reading *u*, (see fig. 4). The former is closed by a piece of ordinary glass. The reading-slit is provided with a slide holding a thin plan-parallel piece of glass. The rising

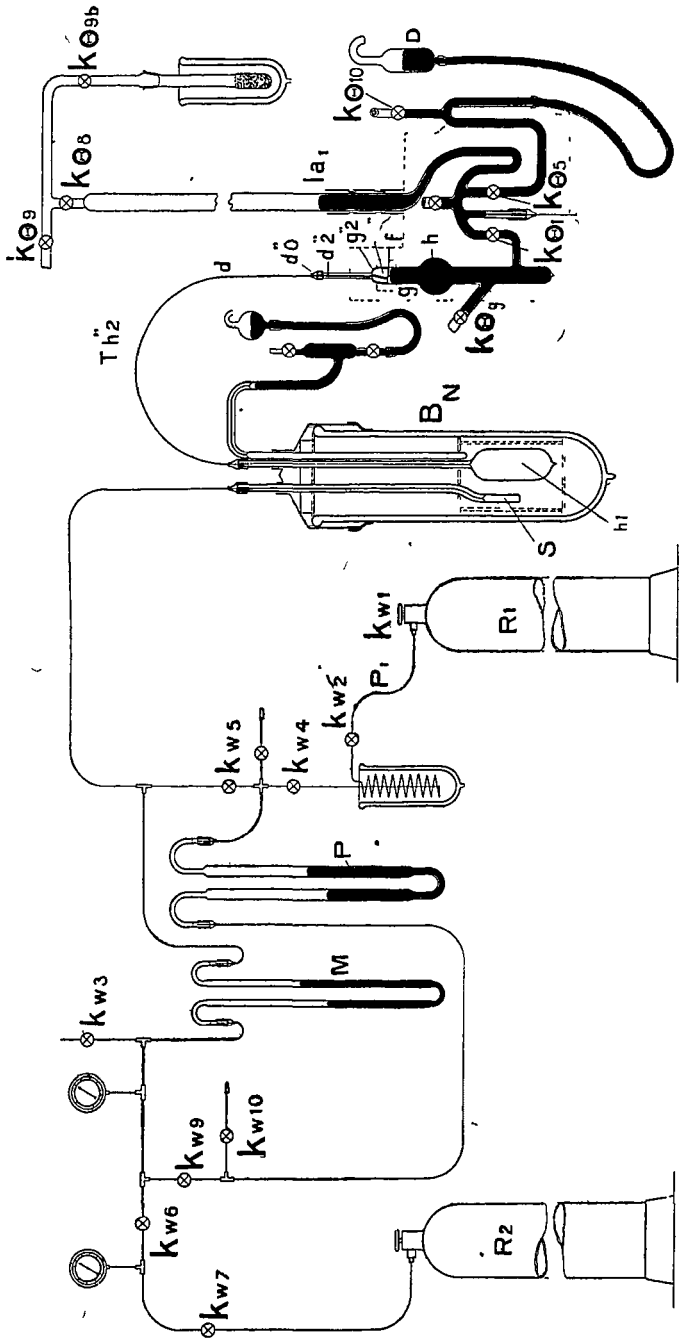


Fig 3.

manometer-tube is surrounded (see fig. 4) by a copper enclosure forming the continuation of the chamber by piling up, as far as the mercury reaches, a number of mutually fitting pieces of copper tubing consisting of hinging halves. One of them carries a thermometer in a copper tube soldered to the main piece.

It is of special importance to know the noxious volume with great accuracy [1]). All its parts are calibrated in the manner detailed on previous occasions [2]), whereas the spaces at the soldering places of the steel capillary to the glass capillary are known by measuring and estimating the various dimensions. Moreover a volumenometric determination was made by sealing the steel capillary at the thermometer-end, filling the adjustment-space and capillary with dry air and utilising the calibration-tap $K\Theta g$ mentioned in note 1 p. 992. [3]) The two results, by the direct measurement and weighing and by this volumenometric determination of the volume of the adjustment-space between a horizontal plane through the adjustment-point and the sealing-place of the thermometric capillary agree within a few mm³.

The measurements with the present thermometer [4]) are carried out in the same manner as before with the previous types of instrument (see particularly Comm. N°. 141*a*).

The correction for the capillary of the thermometer is obtained by mounting the wider capillary of an auxiliary thermometer beside the capillary in question, according to the method used by CHAPPUIS. (See fig. 1).

§ 3. *Apparatus and method.* Fig. 3 gives a general aspect of the

[1]) It is possible in the manner followed by HENNING, Ann. d. Phys. (4) 40 1913) p. 635 to free the measurements of the temperature from an error which (as in his measurements) remains in the determination of the noxious space, by not using the real pressure-coefficient in calculating a certain range of temperatures, but that one which is found by calculation with the incorrect value of the noxious space, but it is very much preferable to prevent errors of that kind by a careful determination of the noxious space, which as a matter of fact does not involve any special difficulties.

[2]) In computing the space between a horizontal plane passing through the adjustment-point and the surface of the mercury the formulae of LOHNSTEIN and of SCHEEL and HEUSE were used. For the determination of the section of the tube at the place of adjustment, a temporary glass tap was blown to the lower end of the adjustment-tube.

[3]) In this measurement the steel capillary was surrounded by a copper tube to make sure of the temperature.

[4]) The data of the thermometer are as follows: Volume of thermometer-bulb 108·31 cm³; volume of glass capillary ·040 cm³; noxious space ·767 ± ·003 cm³ diameter manometer-tube 1·473 cm.; change of volume of bulb for 1 atm. change of pressure 0051 cm³.

apparatus for determining vapour-pressures. In the experimental space inside the vacuum-glass $B_N$ of the hydrogen-vapour cryostat beside the helium-thermometer (§ 2) and the auxiliary capillary of CHAPPUIS is placed the small vessel $S$, which is meant to receive the condensed hydrogen and whose volume is known [1]). The high-pressure reservoir $R$ contains the pure hydrogen which has been obtained by distillation. A sufficient quantity of it is collected in the calibrated arm (in the drawing on the right hand side) of a pressure tube $P$, which is half full of mercury by means of a pipette $P_1$ (between the stop-cocks $K_{W_1}$ and $K_{W_2}$), using a differential manometer $M$ placed in parallel with it. The pressure-equilibrium which is changed by the admission of hydrogen is re-established by the admission of compressed air, which is contained under high pressure in the supplycylinder $R_2$. In this manner the pressure in the vapour-pressure apparatus is gradually raised to the equilibrium pressure between liquid and vapour, corresponding to the temperature in the cryostat. $K_{W_4}$ is then closed and a known quantity of gas present in the pressure-tube $P$ can be carried over into $S$ as liquid. [2])

$S$ is calibrated. When a known quantity of hydrogen has been added, $K_{W_5}$ is closed and the operations are stopped until the equilibrium of temperature which is disturbed by the adiabatic compression of the gas has been restored, as shown by the indication of the differential manometer $M$. When at the same time the temperature in the cryostat, as checked by means of two platinum thermometers, has become constant, the pressure-measurements can be started. For this purpose the air-side of the differential manometer is connected along $K_{W_3}$ with the open standard gauge of the laboratory (Comm. N°. 44). Concurrently with the determination of the pressures in the different parts of the apparatus one or more readings of the gas-thermometer are taken. In this manner determinations were made for a series of temperatures; in a few cases moreover measurements were made at one and the same temperature with different quantities of liquid, in order to make sure that the equilibrium pressures with little and with much liquid in the vapour-pressure bulb $S$ were the same at the same temperature, as must be the case, if the temperature is uniformly distributed and the gas is pure.

*(To be continued).*

[1]) For the cryostat and the arrangement of the various apparatus inside it, as also for the method of regulating the temperature, we refer to fig. 1 of Comm. N°. 151*a*. For simplicity the auxiliary capillary of CHAPPUIS has there been left out.

[2]) For this purpose the right-hand arm of the pressure tube P is calibrated. The density of hydrogen is obtained by estimation by means of the law of the straight diameter from the data of Comms, N°. 137*a* and N°. 151*c*.