Chemistry. — "*The Light Oxidation of Alcohol* (III). *The Photo-Catalytic Influence of some Series of Ketones on the light Oxidation of Ethyl Alcohol*". By W. D. COHEN. (Communicated by Prof. J. BÖESEKEN).

(Communicated at the meeting of May 26, 1923).

Introduction. A first communication on this subject appeared in these proceedings [1]) already several years ago; a continuation of this was published by BÖESEKEN [2]). In this paper the theoretical grounds on which these researches are founded, are set forth in extenso [3]), and we may, therefore, refer to this treatise for a study of them.

It was now my purpose to examine what relation exists between the configuration of a ketone and its photo-catalytic influence on the oxidation of a definite alcohol, and for this reason I studied the influence of some series of ketones on the velocity of oxidation of ethyl alcohol, to be able, if possible to arrive at a conclusion with regard to the constitutive requirements which a ketone must satisfy to be able to act as a photo-catalyst under the circumstances specified later, which at the same time establishes its photo-chemical attackability. This question has, indeed, already been mentioned more than once before [4]), but the comparatively small regularity in the observed phenomena rendered an extension of the research in this direction very desirable.

The light-thermostat. In the reaction:

Light + Ketone + Alcohol + Oxygen = Ketone + Aldehyde + Water

a certain quantity of oxygen disappears, and the rapidity with which the oxygen is absorbed, is under for the rest fixed circumstances, a measure for the photo-catalytic activity of the examined ketone.

The light thermostat (fig. 1) consists of a copper trough, provided with two windows placed opposite each other in the longitudinal walls, which make a continual observation of the reaction vessel

---

[1]) BÖESEKEN and COHEN, These Proc. XVIII, p. 1640.

[2]) BÖESEKEN, Rec. 40, 433 (1921).

[3]) Ibid, 437.

[4]) COHEN, Rec. 39, 258 (1920). Chem. Weekblad 13, 902 (1916).

possible, and a window in the bottom for the illumination. The thermostat rests on an iron framework, which has become an entirely

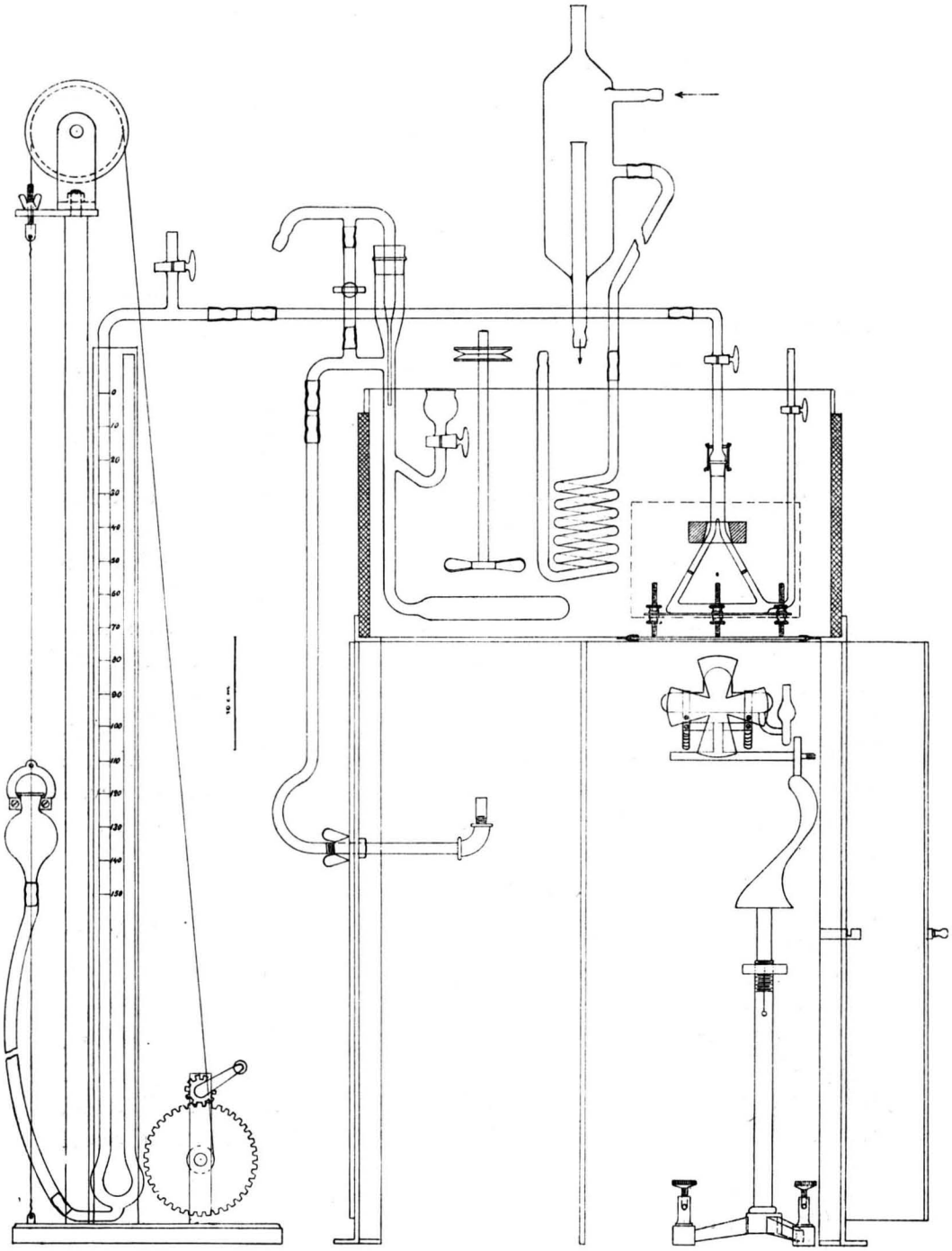

Fig. 1.

closed space by a cover of incombustible material. This space is divided in two by a vertical partition. On the left there are found two gas-burners connected with a thermo-regulator, and on the right there is adjusted a Heraeus quartz lamp. To work this the wall in the lefthand side of the framework is made like a door (drawn halfopen in the figure); in the front partition at the place of the incandescent body there is a ventilator which works by suction and serves to cool the lamp. The water in the thermostat can further be cooled by means of a cooling spiral, through which water flows under constant pressure, a screw stirrer ensuring thorough mixing in the trough; besides the windows, the vertical walls are insulated with felt. Ventilator and stirring apparatus are worked by separate regulatable motors. The temperature of the thermostat can be kept constant at $35 + {}^{1}/_{100}{}^{\circ}$, which temperature has been chosen, because at this temperature the thermostat can be regulated most accurately.

As reaction vessel I, at first, used the before described stirring-apparatus[1]) (fig. 2); it possesses the drawback, however, that the surface of illumination is small, the accuracy of the measurement being seriously impaired by the rapid contamination of the mercury in the mercury feal. Therefore I tried to modify the reaction vessel in such a way that also without intensive mixing of gas and liquid, an alcoholic liquid could be obtained, which remains saturated with oxygen, or contains at least such an excess of oxygen that there can be no question of measuring a velocity of diffusion instead of a velocity of reaction.

This is possible when the thickness of the liquid layer is taken very small (about 1 mm.). According to fig. 3 a reaction vessel is then obtained, which chiefly consists of a flask with a perfectly flat bottom; the dimensions being such that 5 cc. of liquid give a thickness of layer of 5 mm. The neck is narrow and possesses a ground piece to which a bent capillary tube with tap can be attached. Near the bottom there is further a side tube with tap, through which the whole apparatus can be filled with oxygen. Besides there is a filling body in the flask, to make the gas-volume as small as possible in proportion to the surface of illumination; this considerably enhances the accuracy of the measurement. For definite purposes this filling body has been made to a second reaction vessel within the former; then an apparatus is obtained as is shown in fig. 4.

By the aid of a narrow tube the reaction vessel is connected with the micromanometer. The lefthand leg of this has a capacity

[1]) These Proc. XVIII, p. 1642.

of 1,5 cc. and is divided into 150 parts. Each space between two dividing lines represents, therefore, a capacity of 0.01 cc. The adjustment is obtained by moving the flask up and down by means of a hoisting apparatus, the position of the meniscus in the two

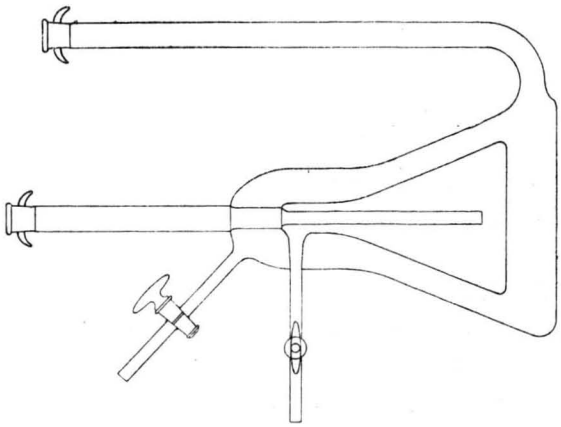

Fig. 5.

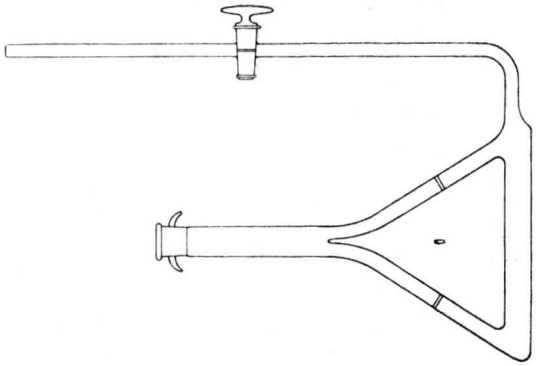

Fig. 3.

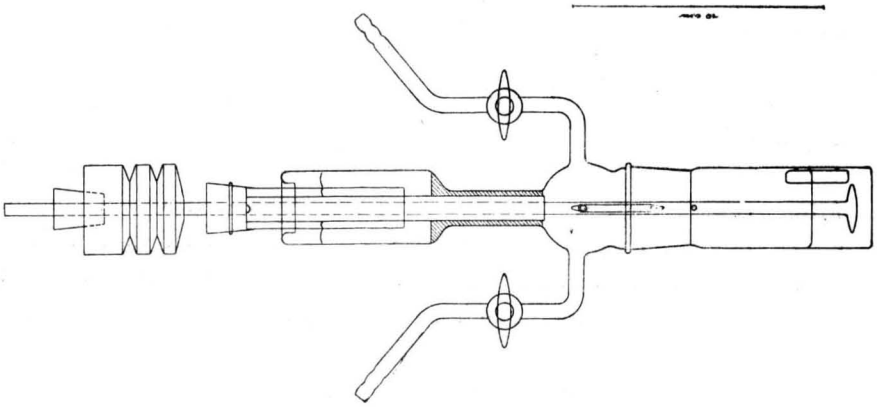

Fig 2.

legs of the manometer being verified by a mirror behind it, on which horizontal lines are drawn at distances of 1 mm. When the apparatus has been properly cleaned and filled with distilled mercury, an accuracy of adjustment can be attained of 1 or 2 hundredths, which as well as the influence of the temperature lies within the limits of the error of observation. The calibration error of the apparatus was so small that it could be neglected.

After having been weighted with a copper ring, the reaction vessel is placed on a glass table, which itself rests on the bottom plate of the thermostat. The table can be put in a horizontal position by means of three adjusting screws, through which the thin liquid layer entirely covers the bottom surface of the reaction vessel. After being lit the incandescent body of the lamp is always placed in a horizontal position; the lamp burns at a terminal voltage of 110 Volts and a series resistance of about 20 Ω constant at 2,7 Amp./40 Volt. Lamp and reaction vessel are always at the same distance from each other; in my experiments the distance from the bottom side of the reaction vessel to the window was 20 mm., and from the upper side of the lamp to the window 25 mm.; taking into account the thickness of the glass, the mutual distance from lamp to object was about 50 mm.

The measurements.

a. The preparations. They were prepared for the greater part by myself or under my supervision, and purified as carefully as possible. As the way of preparing is known for all of them, we may refer for this to the records of the literature published on this subject. When it was possible, at least two preparations of different origin were examined, or the preparation was again recrystallized or distilled after the measurement; the values found were not considered as definitive until they were perfectly constant and reproducible; save for a single exception this was always the case.

b. As solvent, resp. liquid that is to be oxidized, was used absolute ethylalcohol, not because its being absolute was quite indispensable for the success of the reaction — for water is formed during the reaction — but in order to start always from a solution of constant proporties. In my earlier investigations I had come to the conclusion that water would be a strong anti-catalyst, at least for the photo-chemical reduction [1]). At the time I did not yet know the photo-catalytic alcohol oxidation by molecular oxygen, nor that

[1]) COHEN Rec. 39, 244 (1920).

this reaction and the keton reduction were primarily the same, and that it is, therefore, illogical to assume that water would be an anti-catalyst in the ketone reduction. It has really appeared in a new investigation, that there would be no question at least of a considerable anti-catalytic action of water, but that the error made before, which has, unfortunately, already been adopted in the handbooks [1]), must be attributed to a wrong interpretation of the experiments made at the time.

It seems to me of use to discuss this a little more at length, if it were only to point out how easily certain phenomena are overlooked in the study of a reaction. For at first I made my experiments on the photochemical ketone reduction in such a way that I illuminated the 96 % alcoholic solution in a thin layer in *open* flasks, but did not observe then anything of the crystallisation of the sparingly soluble pinacone already described by CIAMICIAN [2]). This succeeded however without any difficulty when I used absolute alcohol — as CIAMICIAN also did —, and besides worked in *closed* apparatus, hence with exclusion of oxygen. I then drew the very plausible conclusion, which proved erroneous afterwards, that water would be a strong anti-catalyst, and quite overlooked the interesting photo-catalytic alcohol oxidation in which — the results of this paper are a convincing proof of this — aldehyde *does* appear, but no pinacone [3]), and which was not discovered until a few years later.

c. In order to be able always to have a great excess of oxygen at our disposal, the reaction vessel after addition of 5 cc. of the solution to be examined, is filled with oxygen which is saturated with alcohol vapour in a washing bottle. Under these circumstances the solution always remains more than sufficiently saturated with oxygen; it is, however, without influence on the result of the measurements, if the gas in the reaction vessel is air or oxygen; for the sake of safety oxygen was, however, always taken.

The measurements, the results of which are combined in the following table, extend chiefly over the following series of ketones:

a. benzophenon and its hydration products in the nucleus,

b. acetophenon and some alkyl-, and also phenyl substitution products in the CH_3-group,

c. the phenyl substitution products of acetone,

d. the simplest aliphatic, aromatic, and fat aromatic α-β-diketones,

e. some α-β-γ-triketones.

The figures over the horizontal division line indicate the molar

---

[1]) HOUBEN—WEYL. Die Methoden der organischen Chemie 2te Aufl. (1922), Band II pag. 983.

[2]) CIAMICIAN and SILBER, Ber. 33 2911 (1900); 34 1530 (1901); 44 1288 (1911).

[3]) BÖESEKEN and COHEN, l.c.

concentration of the ketone, the values under it representing the oxygen absorption, expressed in cc. per hour. They are the mean of a great many mutually concordant observations.

1. Benzophenon.

1 (saturated)	3/4	1/2	1/4	1/8	1/16	1/32	1/64
10.30	**12.00**	**12.00**	**11.90**	9.00	5.60	3.65	2.28

2. Phenylcyclohexylketone.

1 (saturated)	1/2	1/4	1/8
5.15	**5.00**	2.82	1.12

3. Dicyclohexylketone. Inactive in all concentrations.

4. Phenyl n. hexylketone.

2	1	1/2	1/4
1.00	**0.97**	0.68	0.22

5. Di-n hexylketone. Inactive in all concentrations.

6. Acetophenon.

2	1 1/2	1	1/2	1/4
1.30	**1.40**	**1.42**	1.03	0.22

7. Propiophenon.

2	1	1/2	1/4
1.10	**1.11**	0.92	0.20

8 Phenylbenzylketone.

1/2 (saturated)	1/4	1/8
5.05	**4.85**	2.35

9. Diphenylacetophenon.

1/32 (saturated)	1/64
3.13	0.78

10. Triphenylacetophenon (β-benzpinacoline). Inactive.

11. Acetone. Inactive in all concentrations.

12. Monophenylacetone.

3	2	1
0.50	**0.48**	0.35

13. Symm Diphenylacetone (dibenzylketone).

2	1	1/2
1.76	**1.75**	0.85

14. Asymm. Diphenylacetone.

1 (saturated)	1/2
0.03	0.01

15. Triphenylacetone 1.1.2.

1/8 (saturated)
0.05

16. Symm Tetraphenylacetone [1]).

1/50 (saturated)
0.17

17. Phenylfurylketone.

2	1	1/2
0.07	0.10	0.10

18. Diacetyl.

4	3	2	1 1/2	1	3/4	1/2	1/4	1/8	1/16	1/32
16.00	**15.30**	**15.30**	**15.10**	**14.90**	14.10	10.60	6.40	2.60	0.64	0.16

19. Benzil.

1/4 (saturated)	1/8	1/16
3.20	1.44	**0.52**

20. Acetylbenzoyl [2]).

4	3 1/2	3	2	1 1/2	1	3/4	1/2	1/4	1/8	1/16
8.60	11.70	**12.90**	**12.60**	**12.80**	**13.10**	10.80	8.50	6.05	4.15	2.08

[1]) Prof. STAUDINGER, Zürich, had the kindness to send me a small quantity of this preparation.

[2]) By illuminating an alcoholic solution of acetylbenzoyl in a sealed tube the corresponding photoreduction product can be very easily obtained. The substance consists of very fine colourless crystal needles, sparingly soluble in alcohol, and is perfectly stable at the air in dry condition. For the rest the compound is quite comparable with the corresponding reduction product of diacetyl (Comp. Chem.

21. Furil.

$^1/_{16}$ (saturated)
2.80

Remark. After some time's illumination the absorption, which was constant at first, descends to 0; in this the ketone itself is attacked with decoloration of the liquid

22. Benzfuril.

2	1	$^1/_2$	$^1/_{16}$
5.80	6.30	6.20	2.20

23. Terephtalophenon.

0.01 (saturated)	0.006	0.004
2.80	3.55	3.45

24. Isophtalophenon.

0.1 (saturated)	0.01
2.80	1.48

25. Phenanthrenequinone.

0.02 (saturated)	0.01
10.50	6.25

Remark. Behaves like furil.

26. Anthraquinone.

0.004 (saturated)
0.67

27. Camphorquinone. The activity varies with the origin of the preparations. Some five varied at $^1/_8$ mol. from 0.19—0.43. With still lower concentrations, and also with very small ones the activity is practically not perceptible

28. Fluorenone. In all concentrations — also very small ones — inactive.

29. α-Hydrindon.

2	1	$^1/_2$
0.19	0.17	0.07

Weekbl. 13, 594 (1916); it melts amidst decomposition at 116°—124°. It is still uncertain whether the structure formula is:

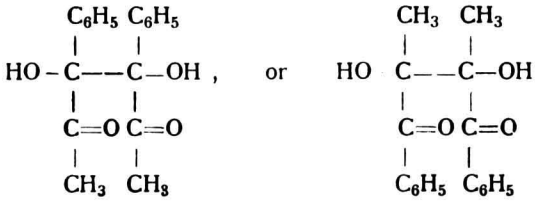

30. β-Hydrindon. Is useless as a photocatalyst, as this substance itself is very readily attacked by oxygen in alcoholic solution.

31. Indanedion 1.2.

1/8 (saturated)	1/16
0.92	0.39

32. Pentanetriketone. Inactive.

33. Diphenyltriketone. Inactive.

34. Alloxane. Exceedingly slight activity.

These data allow us to draw the following conclusions:

a. The velocities of activation are independent of the concentration of the ketone (printed in bold type in the tables) within comparatively wide limits, quite corresponding to the reduction velocities found before[1]. This phenomenon does not, indeed, manifest itself in all the examined cases, but it should not be forgotten that the circumstances of the experiment necessitate a certain degree of activity and solubility of the ketone to reach the maximum velocity of activation.

Clear examples in which the oxygen absorption remains constant within wide limits, are benzophenon, diacetyl, and benzoyl acetyl (compare the graphical representations in fig. 5 and 6). We sometimes see the activity diminish again in very high ketone concentrations (20) or in the neighbourhood of the point of saturation (1), which must then be attributed to mutual disturbances of the ketone molecules[2]. The diminution of activity in lower concentrations must simply be accounted for by the absence of a sufficient quantity of activable ketone molecules, in which part of the available light is left unused. That really in the concentration region of the maximum activation all the photo-active light is absorbed by a layer only 1 mm. thick, I have been able to prove very clearly by means of the reaction vessel according to fig. 4, which can, therefore, be perfectly compared with the "mantle tubes" described formerly for the photo-chemical reduction. When e.g. an alcoholic (or a benzolic) solution of benzophenon in a concentration necessary for the maximum activation is brought into the outer reaction vessel, a benzophenon solution in the inner reaction vessel appears to absorb no trace of oxygen; the absorption begins, however, to become immediately perceptible, as soon as the ketone concentration in the outer

[1]) COHEN, Rec. 39, 253 (1920).

[2]) Ibid. p. 273.

vessel descends below the critical. In the region of maximum activation all the photo active light is, therefore, arrested by a layer of 1 mm., and this takes place independent of the solvent used. These phenomena are in perfect harmony with what was found before in the ketone reduction. Corresponding experiments with diacetyl and benzoyl acetyl lead to perfectly the same results.

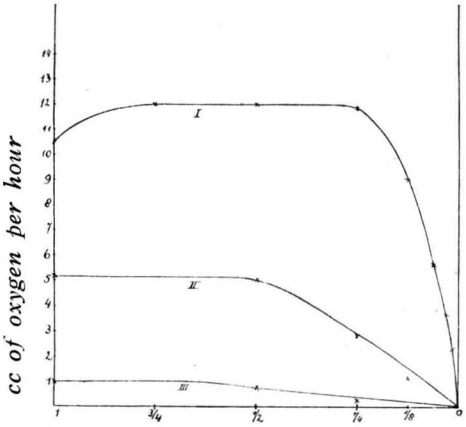

I. benzophenon
II. phenylcyclohexyl ketone } Fig. 5.
III. phenyl. n. hexyl ketone

III. " " "
IV. acetophenon
V. acetylbenzoyl } Fig. 6.
VI. diacetyl

Fig. 5.

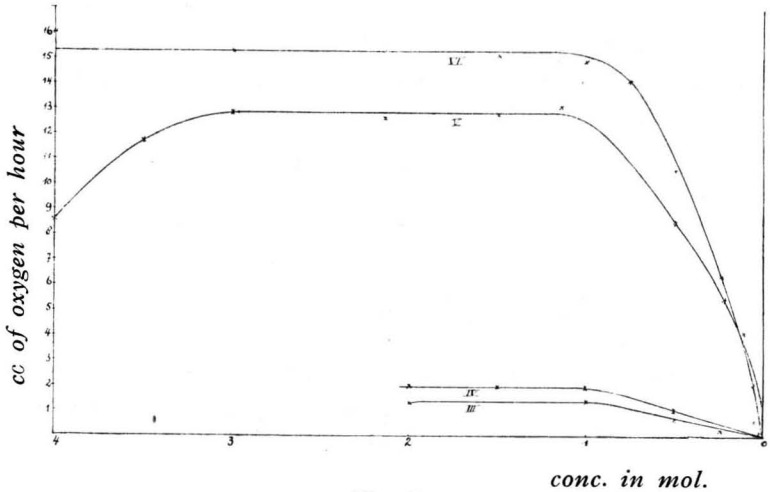

Fig. 6.

b. For the photo-activity of the mono-ketones the "aromatic", character is in general decisive [1]), constitutive factors being of influence by the side of it. Thus the photo-activity of benzophenon has been reduced to about half its value, when one of the nuclei

[1]) COHEN, Chem. Weekbl. 13, 902 (1916).

has been hydrated (2) (fig. 5), and it has quite disappeared in the dicyclohexyl ketone (3). That for the rest the cyclohexyl nucleus weakens the activity of the phenyl nucleus less than a purely aliphatic group, is proved by the much smaller activity of phenyl n. hexyl ketone (4) (fig. 5), which may be put on a line with the activity of acetophenon and propiophenon (6,7) (fig. 6). On introduction of C_6H_5-groups into the CH_3-group of acetophenon, the activity at first greatly increases (8,9), suddenly becoming 0 in triphenyl acetone. It is, indeed, known that β-benzpinacoline lacks all the ketone characteristics. In the phenyl substitution products of acetone (quite inactive in themselves, just as di-n-hexyl keton (5, 11)), the introduction of only one phenyl group appears to make the compound photo-active (12). Of the higher phenyl substitution products, the molecules built symmetrically show the greatest activity (compare 13 and 16 with 14 and 15).

c. The photo-activity of the α-β-di ketones is a much more general property, and bound neither to the specifically aliphatic or aromatic character, nor in particular to the more or less symmetrical structure of the molecule. The introduction of a second $C=O$ group has mostly a greatly strengthening influence on the photo-activity (compare 18 and 20 with 11 and 6), in which possible disturbing influences issuing from the rest of the molecule, are thrown into the background. In this connection it is e. g. interesting to point out that phenanthrene quinone (25), which is to be considered as a particularly ortho-substituted benzil, far exceeds all the examined ketones with regard to its relative activity, whereas fluorenon (28), which may be compared with it, is perfectly inactive. The opposite case presents itself in the comparison of benzil (19) with regard to benzophenon (1), where the di-ketone compared with the mono-ketone is less active. It may, however, be possible that in consequence of the slight solubility of benzil in alcohol the maximum activation concentration cannot be reached.

Of great importance is also the activity of the α-β-di-ketones, which carry one or two furane-nuclei (21 and 22), which furnishes a new proof of the great resemblance in properties of the furane and benzol derivatives.

d. Thus we see that the phenyl and furyl groups do not exert a disturbing influence on each other in the α-β-di-ketone; this influence is, however, evidently particularly strong in the corresponding mono-ketone, phenyl furyl ketone (17), which presents a very small activity. Here the above-mentioned influence of the symmetry of the molecule on the photo-activity of the mono-ketone is very

pronounced. This influence of the symmetry was already observed more than once in the photo-chemical reduction of the substitution products of benzophenon, but it had not been recognized as such [1]). To give a further support to this view it has been tried to make di-furyl ketone, as this compound would have to possess an activity equivalent to benzophenon. Unfortunately all attempts to obtain this substance have failed so far [2]), but in this connection attention may already be drawn to the much greater activity of terephtalophenon compared with isophtalophenon (23 and 24).

e. A somewhat separate place among the α-β-diketones occupies camphorquinone, the activity of which is unexpectedly slight, and moreover not reproducible. The greater or smaller purity of the preparations seems to be of great influence.

f. α-Hydrindon (29) and indane dion 1 . 2 . (31), considered as internal condensation products of resp. propiophenon (7) and acetyl benzoyl (20), present a greatly diminished activity. β-Hydrindon cannot be used as object of comparison with mono-phenyl acetone on account of its great oxidisibility.

g. The photo-activity of the examined α-β-γ-tri-ketones is zero, or so small as to be negligible (32, 33, 34) [3]). This phenomenon must, without any doubt, be attributed to the paralysis of the middle C=O group caused by the solvent [4]), through which the compound has practically quite lost its favourable properties of double α-β-diketone. [5])

Laboratory of Organic Chemistry
of the Technical University.

Delft, April 1923.

---

1) Compare. COHEN, Rec. 39, 258 (1920).

2) FREUNDLER, Bl. (3) 17, 612 (1897).

3) Compare for the photo-chemical reduction of alloxane Ciamician and Silber, Ber. 36, 1581 (1903).

4) At first pentane tri-ketone and di-phenyl tri-ketone dissolve in absolute alcohol with a dark yellow colour, after standing some time the colour of the solution changes into light yellow, in which very probably alcohol addition products $CH_3-CO-C\begin{cases}OH\\OC_2H_5\end{cases}-CO-CH_3$ and $C_6H_5-CO-C\begin{cases}OH\\OC_2H_5\end{cases}-CO-C_6H_5$ which are analogous to the hydrate, are formed.

5) Comp. SACHS, Ber. 34, 3052 (1901); 35, 3311 (1902); VON PECHMANN, Ber. 23, 3380 (1890); WIELAND, Ber. 37, 1531 (1904); BILTZ. Ber. 45, 3662 (1912).